HIGH TORQUE ENGINEERING, LTD.
The total sheet metal fastener solution
An INDUSTRIAS LOTU, S.A. COMPANY

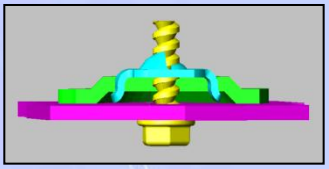

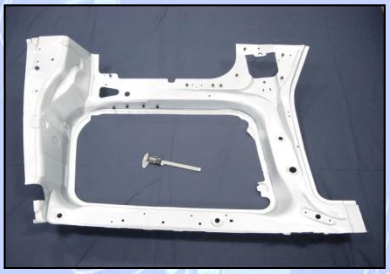

Cross Section of Customer Applications

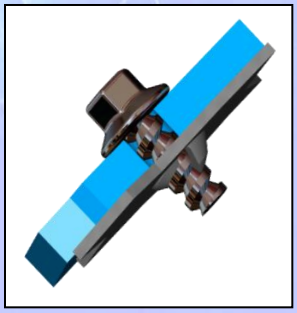

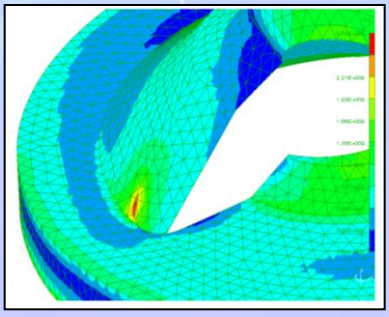

The total sheet metal fastener solution

www.hightorque.co.uk

CATERPILLAR®

POWER GENERATORS

FG WILSON

(Ø6 x 16 Hex-Flange for 1.6mm Material)

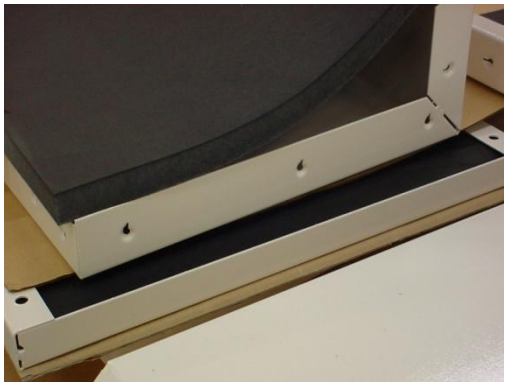

ADVANCED DESIGN GROUP

SPECIFICATION FOR 'IDEAL' FASTENER

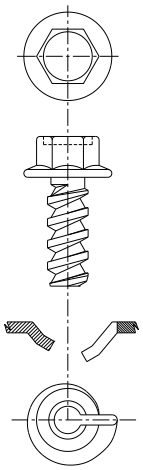

1. Ideally the fastener shouldn't need additional components like hexserts, nutserts, washers or nuts
2. Installation without using special equipment
3. The fastener should be standardised to one size as much as possible
4. The fastener and sheet material should be compatible and not pose a galvanic corrosion concern
5. The fastener should resist vibration
6. The fastener should be reusable for ease of servicing and not effected by additional processes like painting
7. For ease of assembly, the fasteners has to be able to deal with misalignment of parts
8. For site work, the fastener should be easily removable using conventional spanners, screw drivers or allen keys, "NOT SPECIAL TOOLS"

INFORMATION TECHNOLOGY

(Ø3.5 x 6 Pozi-Pan Flange for 0.8mm Material)

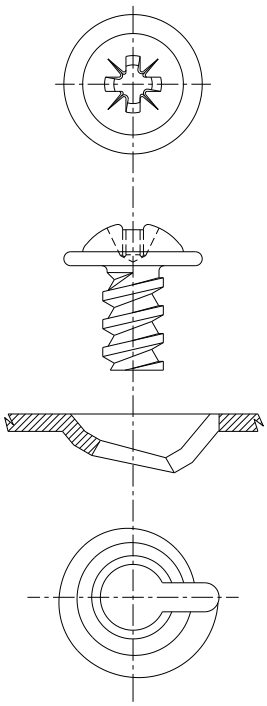

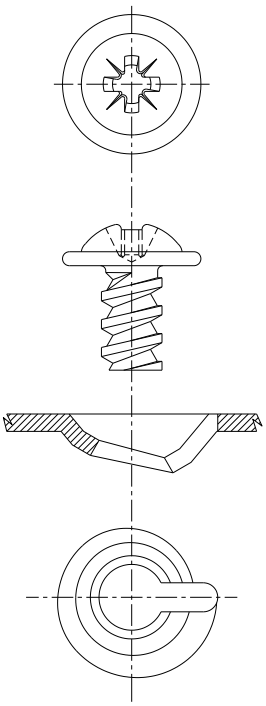

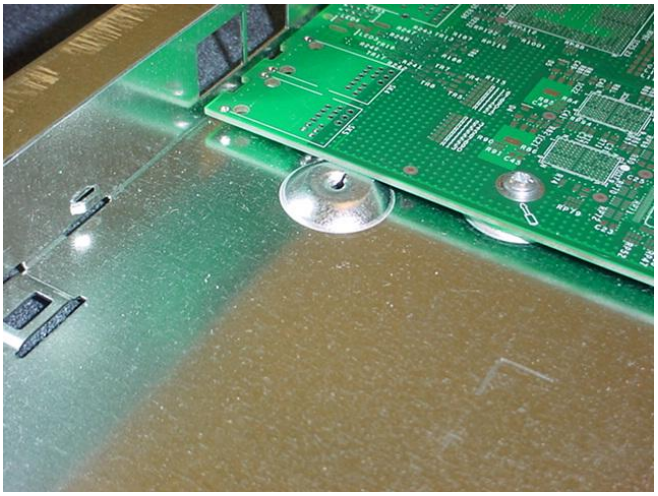

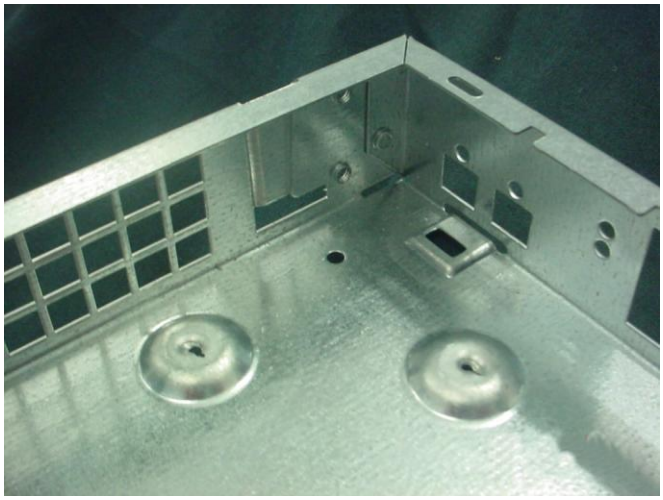

Landrover (Ø6 x 12 Hex-Flange for 1.0mm Material)

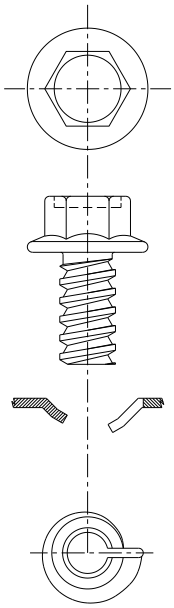

Cost reduction achieved by removing inserts and fixing components directly onto the vehicle body.

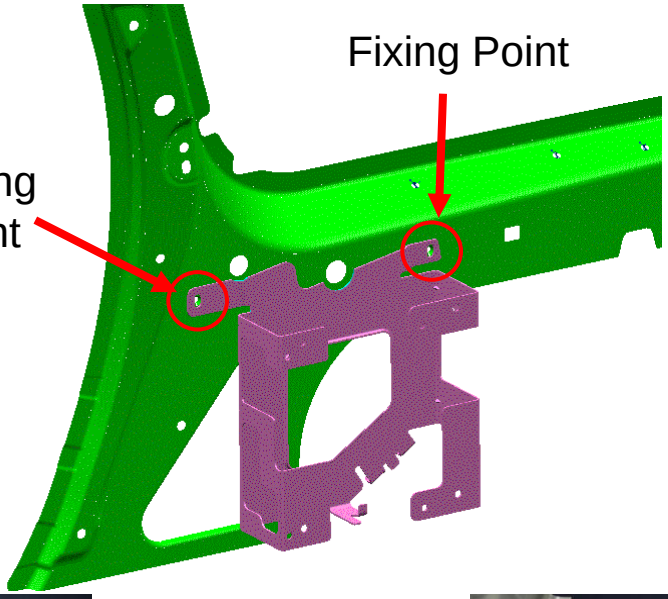

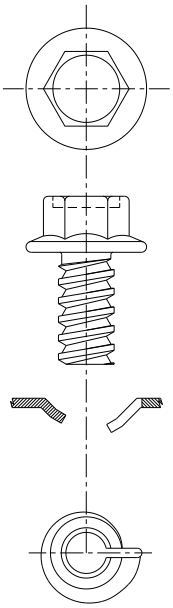

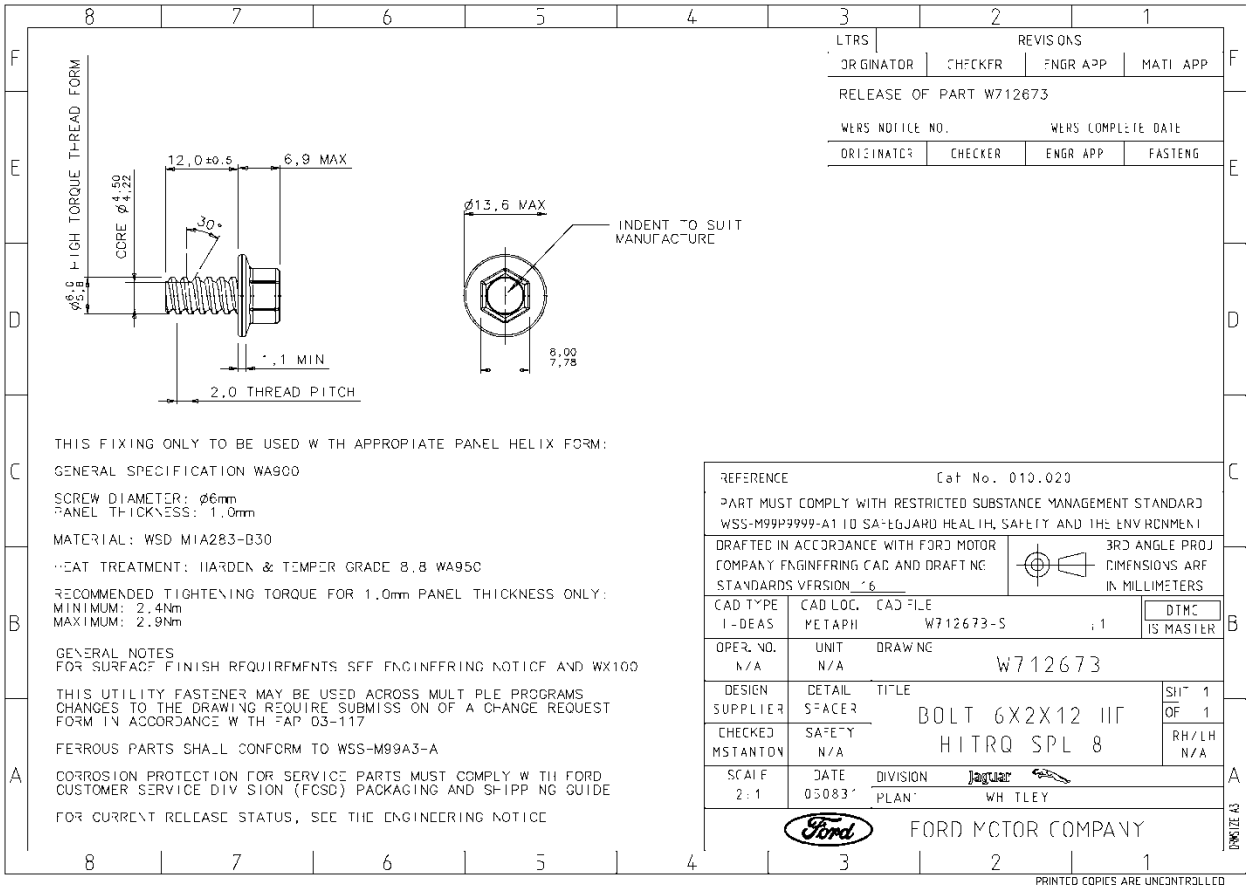
LTRS
REVISIONS
ORIGINATOR
CHECKER
ENGR APP
MATL APP
RELEASE OF PART W712673
WERS NOTICE NO.
WERS COMPLETE DATE
ORIGINATOR
CHECKER
ENGR APP
FASTENG
HIGH TORQUE THREAD FORM
CORE ø4.50 4.22
12,0±0.5
6,9 MAX
30°
ø6.0 5.8
1,1 MIN
2,0 THREAD PITCH
ø13,6 MAX
INDENT TO SUIT MANUFACTURE
8,00 7,78
THIS FIXING ONLY TO BE USED WITH APPROPIATE PANEL HELIX FORM:
GENERAL SPECIFICATION WA900
SCREW DIAMETER: ø6mm
PANEL THICKNESS: 1.0mm
MATERIAL: WSD M1A283-B30
HEAT TREATMENT: HARDEN & TEMPER GRADE 8.8 WA950
RECOMMENDED TIGHTENING TORQUE FOR 1.0mm PANEL THICKNESS ONLY:
MINIMUM: 2.4Nm
MAXIMUM: 2.9Nm
GENERAL NOTES
FOR SURFACE FINISH REQUIREMENTS SEE ENGINEERING NOTICE AND WX100
THIS UTILITY FASTENER MAY BE USED ACROSS MULTIPLE PROGRAMS
CHANGES TO THE DRAWING REQUIRE SUBMISSION OF A CHANGE REQUEST
FORM IN ACCORDANCE WITH FAP 03-117
FERROUS PARTS SHALL CONFORM TO WSS-M99A3-A
CORROSION PROTECTION FOR SERVICE PARTS MUST COMPLY WITH FORD
CUSTOMER SERVICE DIVISION (FCSD) PACKAGING AND SHIPPING GUIDE
FOR CURRENT RELEASE STATUS, SEE THE ENGINEERING NOTICE
REFERENCE
Cat No. 010.020
PART MUST COMPLY WITH RESTRICTED SUBSTANCE MANAGEMENT STANDARD
WSS-M99P9999-A1 TO SAFEGUARD HEALTH, SAFETY AND THE ENVIRONMENT
DRAFTED IN ACCORDANCE WITH FORD MOTOR
COMPANY ENGINEERING CAD AND DRAFTING
STANDARDS VERSION 16
3RD ANGLE PROJ
DIMENSIONS ARE
IN MILLIMETERS
CAD TYPE
I-DEAS
CAD LOC.
METAPH
CAD FILE
W712673-S
DTMC
IS MASTER
OPER. NO.
N/A
UNIT
N/A
DRAWING
W712673
DESIGN
SUPPLIER
DETAIL
SPACER
TITLE
BOLT 6X2X12 HT
HITRQ SPL 8
SHT 1
OF 1
CHECKED
MSTANTON
SAFETY
N/A
RH/LH
N/A
SCALE
2:1
DATE
05083
DIVISION
Jaguar
PLANT
WHITLEY
FORD MOTOR COMPANY
DWG SIZE A3
PRINTED COPIES ARE UNCONTROLLED

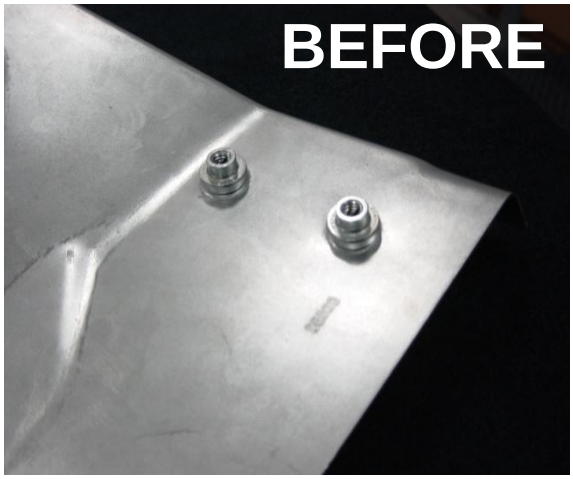
BEFORE


AFTER

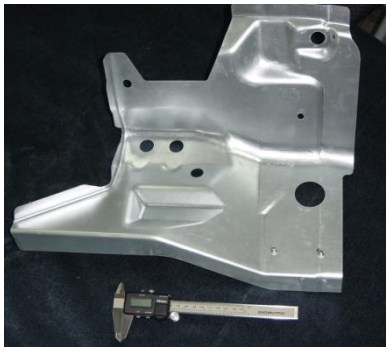

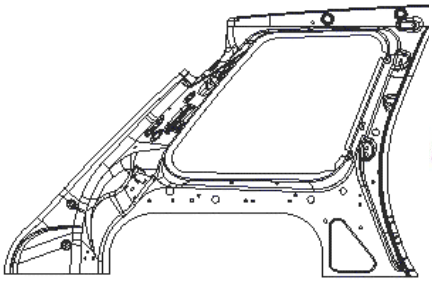

Ford Motor Company – Lear Corp.

(Ø5 x 12 Pozi-Pan Flange for 1.2mm Material)

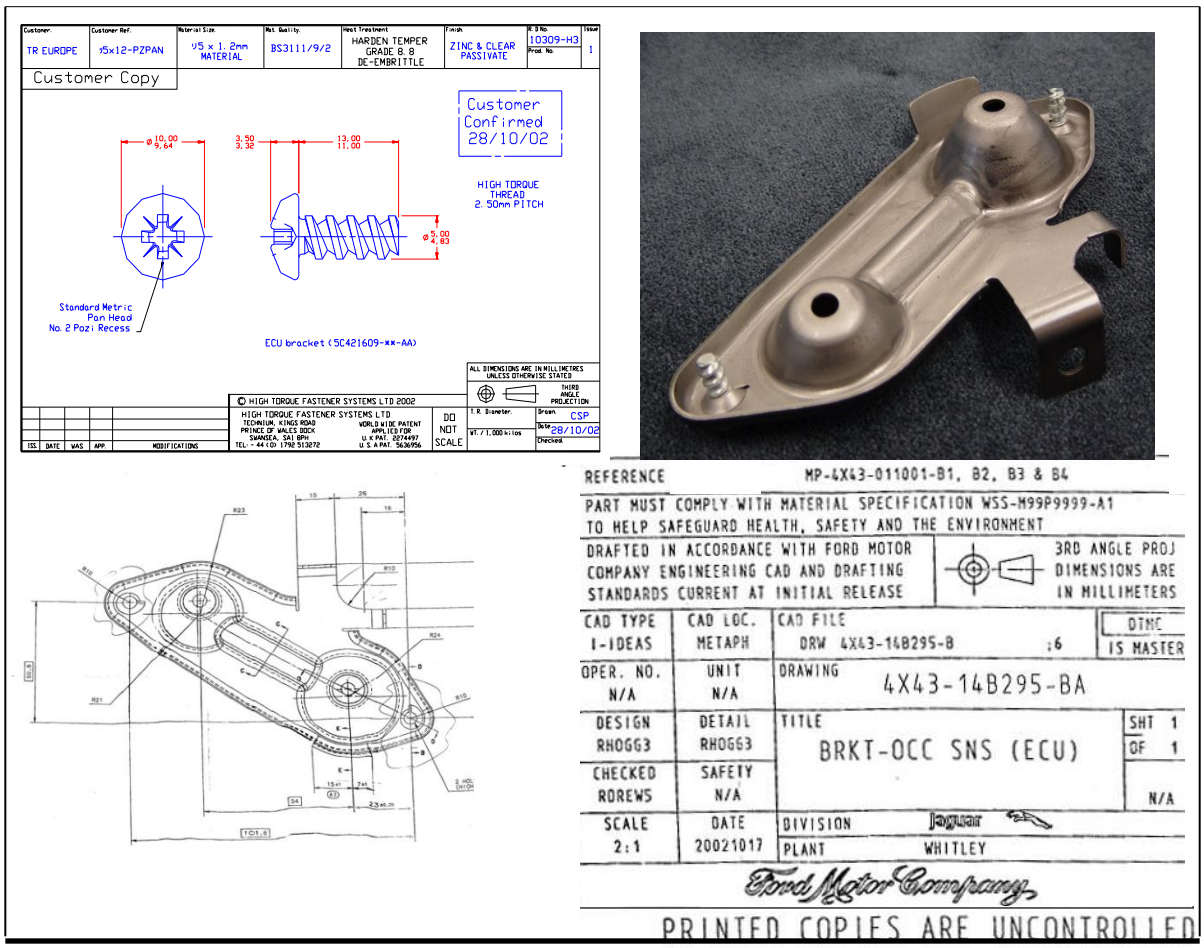

Johnson Security

HIGH SECURITY VEHICLES

(Ø6 x 30 TORX® Pan-Flange for 1.6mm Material)

(Ø6 x 30 TORX® Countersunk for 1.6mm Material)

TRANSFORMER BOXES

Carroll & Meynell - (Ø6 x 16 Pozi Flange for 1.6mm Material)

JMS Transformers – (Ø6 x 16 Hex Flange for 1.6mm Material)

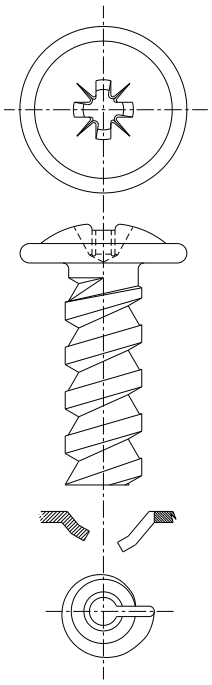

RACKING SYSTEMS

UK Box - (Ø6 x 12 Hex-Flange for 1.6mm Material)

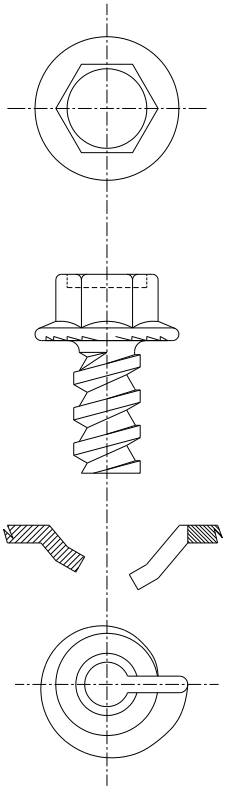

Eliminates the use of cage nuts

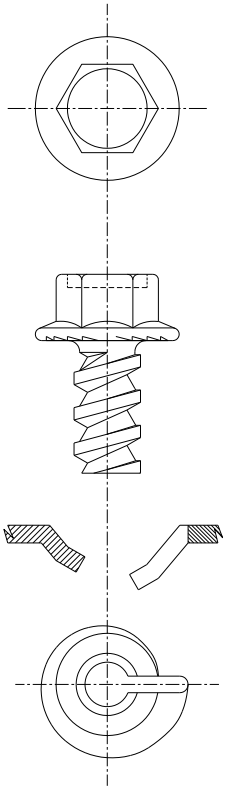

Installation and removal times of blanking plates reduced.

Cage nuts – 4.5 minutes.

HTFS – under 1 minute

Marconi

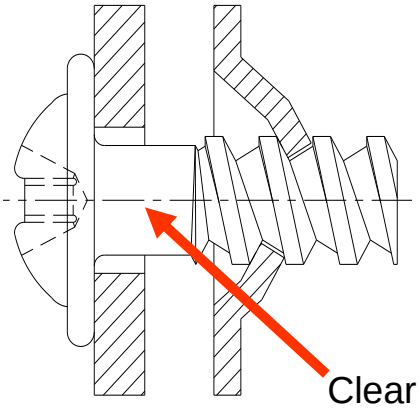

Clear shank to allow for captive washer and EMC gasket to be fitted

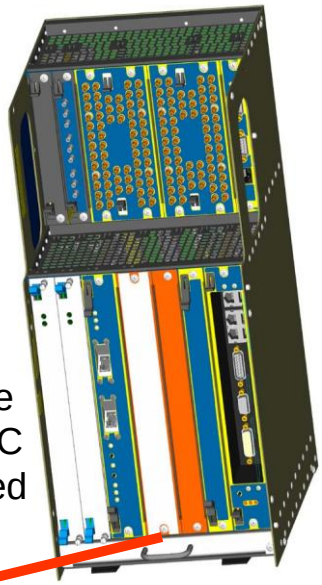

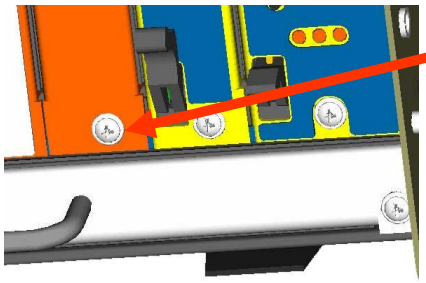

High Torque screws are used to retain the slide in units into the chassis.

(Ø3.5 x 7 Pozi Flange for 0.8mm Material)

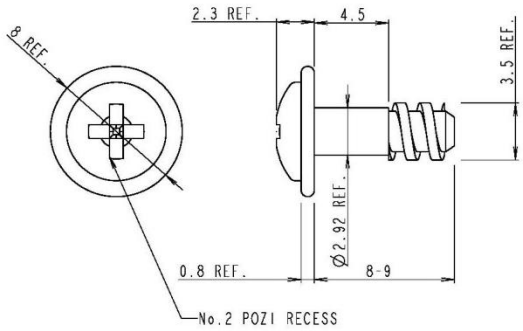

MATERIAL - STEEL
FINISH - ZINC AND PASSIVATE - LEACH AND SEAL JS500
THREAD TO SUIT 0.7/0.8mm MATERIAL.

PURCHASE FROM HIGH TORQUE FASTENER SYSTEMS LTD
www.hightorque.co.uk

MATERIAL WEIGHT (GRAMS)	7.491	PDM MODEL REVISION	1.1

TOLERANCES (ALL DIMS. IN MILLIMETRES)
DIMS +-0.25
HOLES DIA +-0.08
HOLES POSN TOL 0.2 DIA

MATERIAL: PURCHASED
FINISH:
DO NOT SCALE

CHANGE	APP	DATE	ISS
FIRST ISSUE	RSA	04/11/03	001

BUS DEPT. AC4545 | ORIG DAVE COATES | SITE CODE | REF ULTRA COMPACT

A4 A4

Marconi
MARCONI COMMUNICATIONS LTD
NEW CENTURY PARK, COVENTRY
UNITED KINGDOM, CV3 1HJ

LOCKING SCREW - HIGHTORQUE

1MAA68385ABS-EFA SHEET 1

(Ø6 x 10 Pozi Flange for 1.6mm Material)

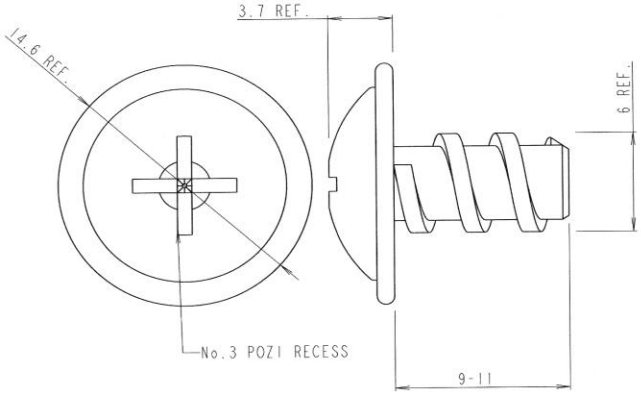

MATERIAL - STEEL
FINISH - ZINC AND CLEAR TRIVALENT - AND SEAL S437
THREAD TO SUIT 1.5/1.6mm MATERIAL.

PURCHASE FROM HIGH TORQUE FASTENER SYSTEMS LTD
www.hightorque.co.uk

HIGH TORQUE PART NUMBER - E0523

PART TO BE RoHS COMPLIANT

MATERIAL WEIGHT (GRAMS)	7.491	PDM MODEL REVISION	0+

TOLERANCES (ALL DIMS. IN MILLIMETRES)
DIMS +-0.25
HOLES DIA +-0.08
HOLES POSN TOL 0.2 DIA

MATERIAL: PURCHASED
FINISH: SEE NOTES
DO NOT SCALE

CHANGE	APP	DATE	ISS
FIRST ISSUE	CRB	24/05/06	001

BUS DEPT. AC4545 | ORIG DAVE COATES | SITE CODE | REF 1664

A4 A4

Marconi
MARCONI COMMUNICATIONS LTD
NEW CENTURY PARK, COVENTRY
UNITED KINGDOM, CV3 1HJ

SCREW - HIGHTORQUE

03MAA00443AAL-FUA SHEET

Corus Panels & Profiles

(Ø6 x 14 Pozi Hex-Flange for 1.6mm Material)
(Ø6 x 32 Pozi Hex-Flange for 1.0mm Material)

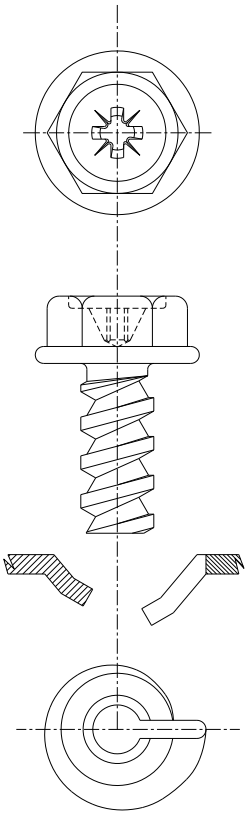

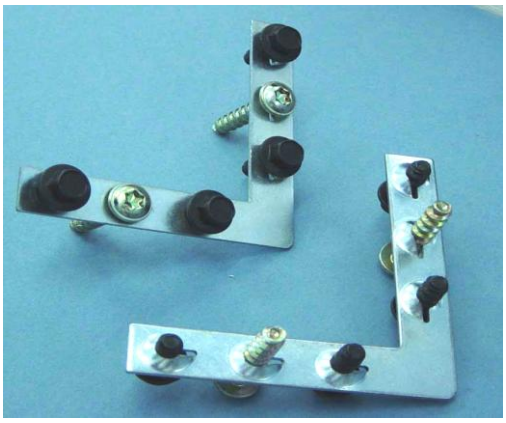

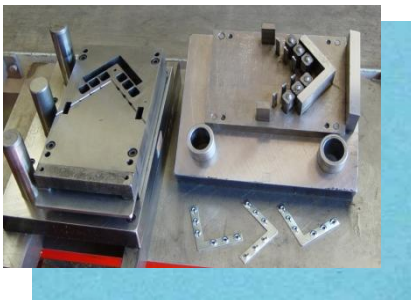

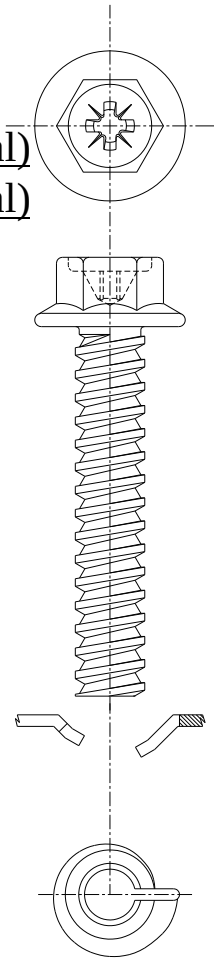

SEVCON FORK LIFT TRUCKS

Ø3 x 26 Hex-Recess Screw for 0.6mm Material

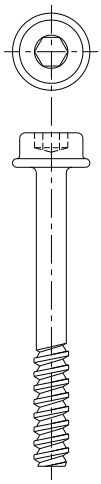

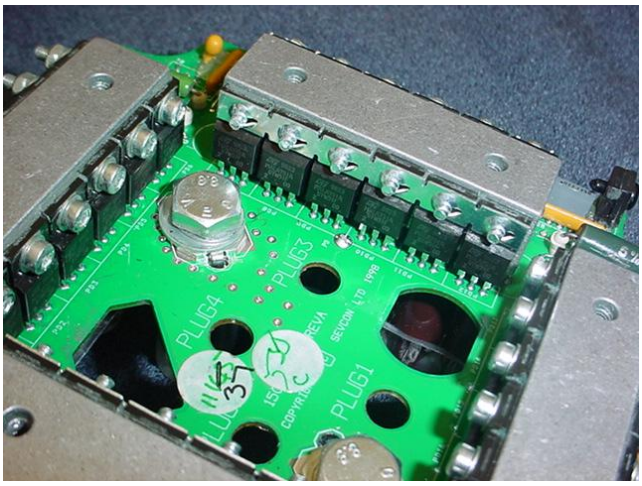

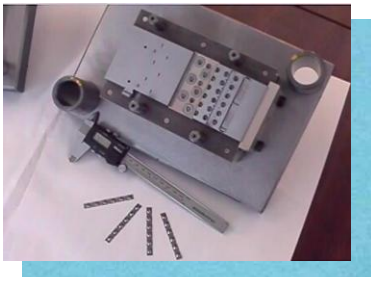

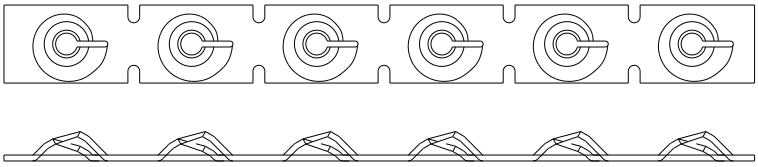

Rangemaster – COOKERS

(Ø10 x 54 Levelling Foot for 2.0mm Material)
(Ø5 x 16 Shoulder Screw for 0.8mm Material)

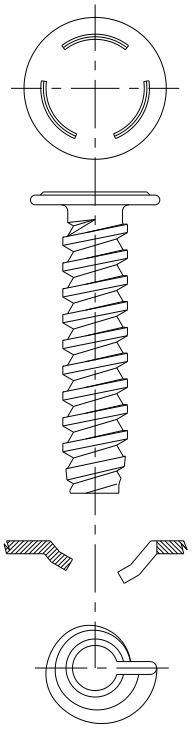

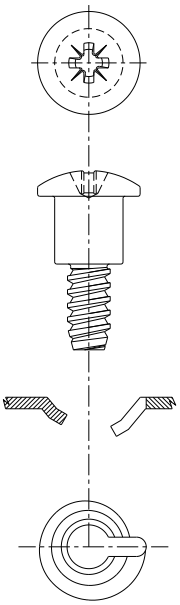

Adjusting Foot

Oven Liner

Panasonic – MICROWAVE OVENS

(Ø4 x 6 Phillips Pan for 0.6mm Material)
(Ø3 x 6 Phillips Shoulder Screw for 0.6mm Material)

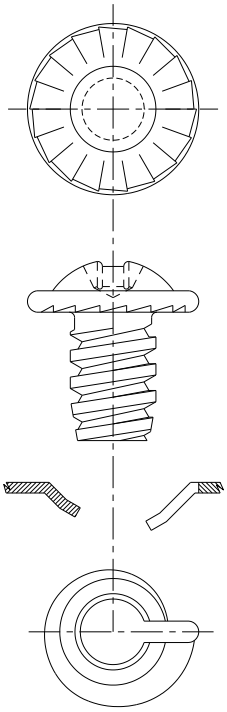

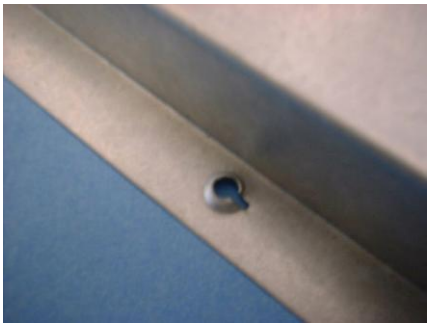

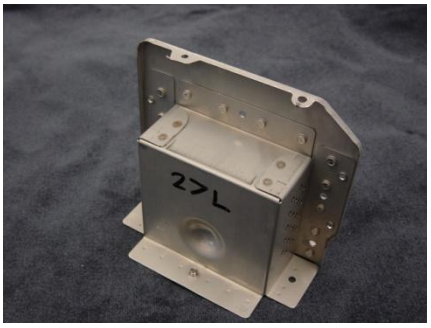

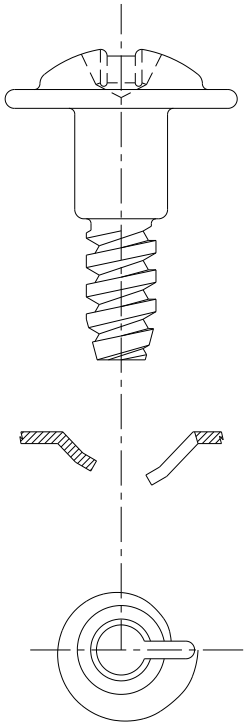

GLASS WASHERS

HOBART
www.hobartuk.com

(Ø5 x 10 Pozi Pan for 1.0mm Material)

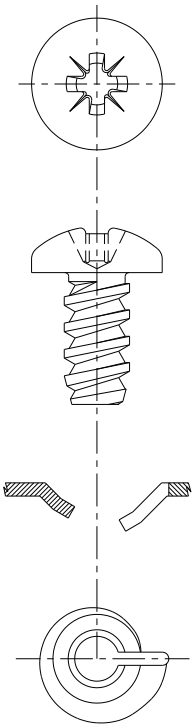

BAKERY EQUIPMENT

MONO

(Ø6 x 15 Pozi Pan for 1.2mm Material)

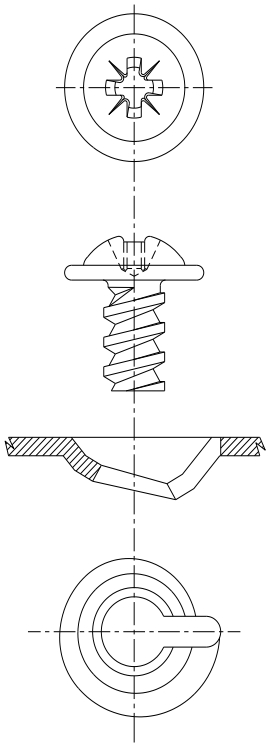

CATERING EQUIPMENT

Lincat

(Ø5 x 10 Pozi Pan for 1.2mm Material)

PARRY

(Ø4 x 10 Pozi Pan for 1.0mm Material)

Leisure Equipment

SPINFLO by THETFORD

(Ø4 x 10 Pozi pan for 1.0mm Material)

INDUSTRIAL & DOMESTIC GAS BOILERS

Caradon Ideal, Baxi Boilers, Firebird, Worcester Heat

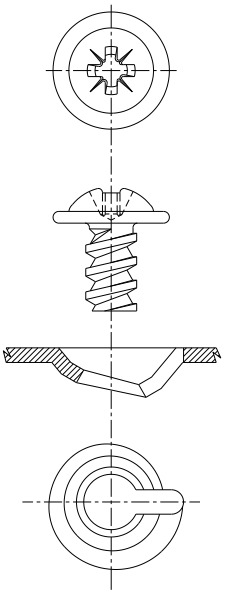

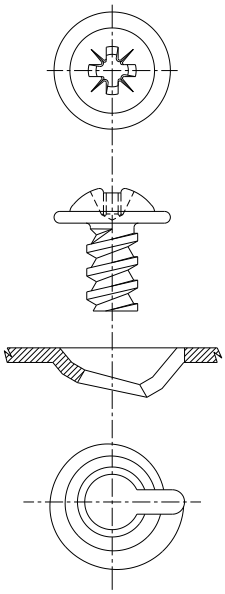

VENDING MACHINES

Booth Dispensers, Darenth MJS, IMI Cornelius

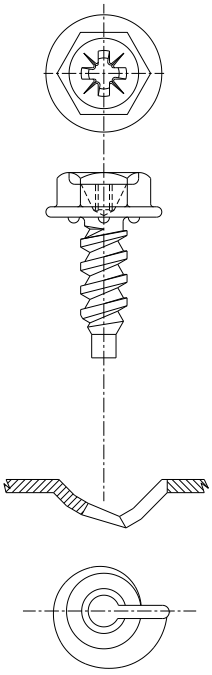

OFFICE FURNITURE

Staverton (Ø10 x 16 Hex Recess for 1.6mm Material)

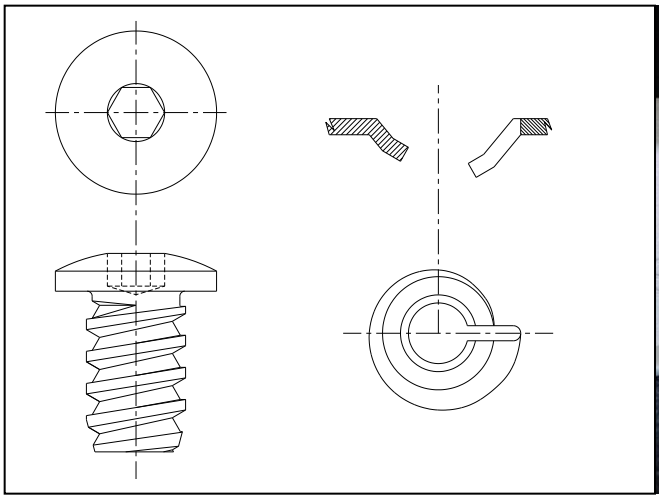

Apton (Ø6 x 12 Pozi Countersunk for 1.2mm Material)

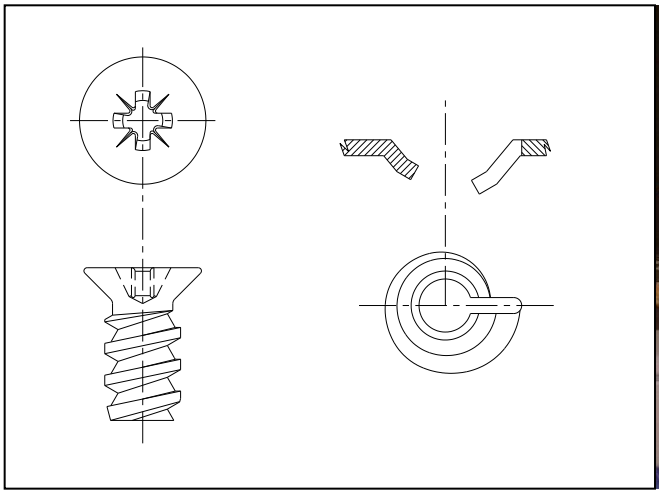

Norwood (Ø5 x 12 Pozi Countersunk for 1.2mm Material)

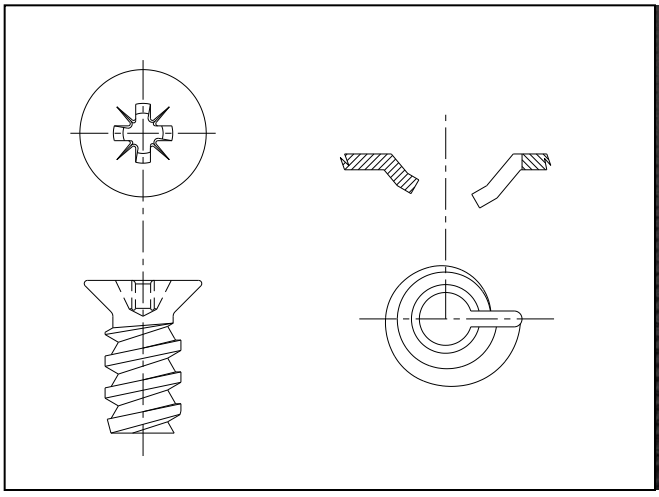

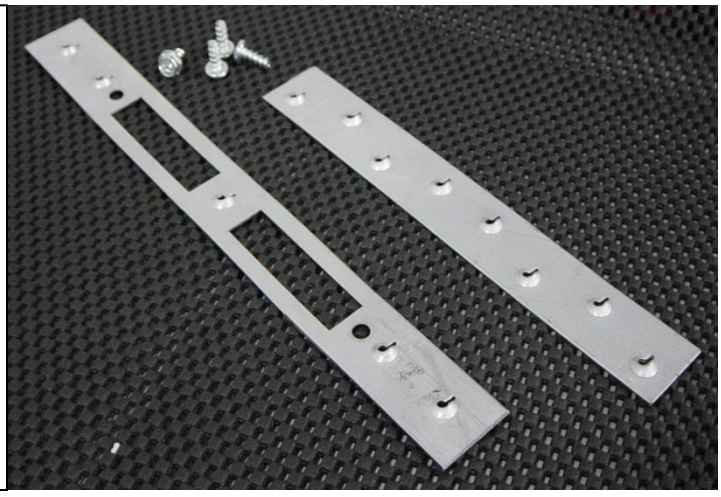

Others Include: **Komfort, Maine & Flexiform**

AIR CONDITIONING

Envirotec (Ø6 x 14 Hex-Flange for 1.6mm Material)

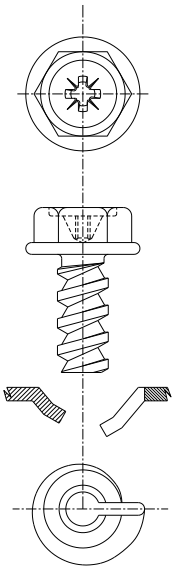

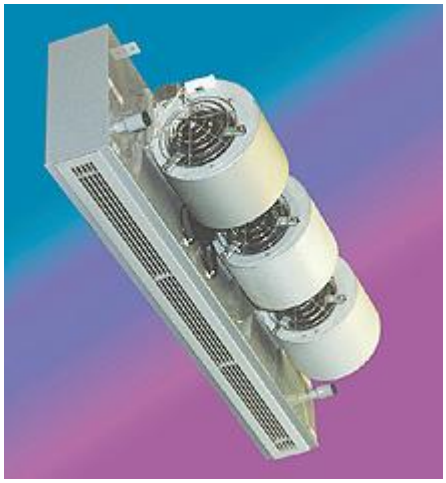

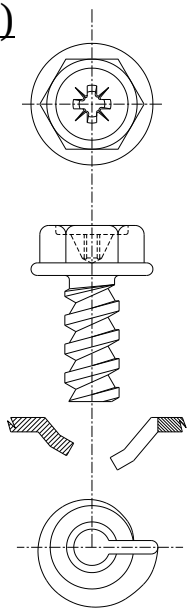

FläktWoods (Ø8 x 16 Hex Flange for 1.6mm Material)

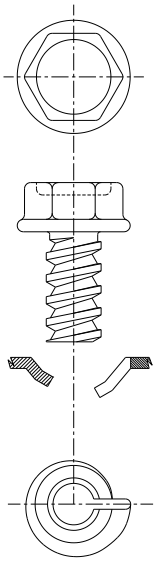

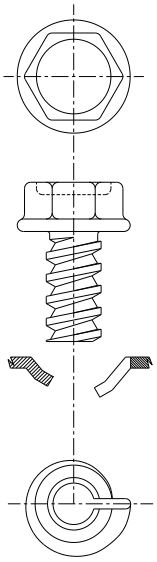

Ambirad (Ø5 x 8.5 Pozi-Pan for 1.0mm Material)

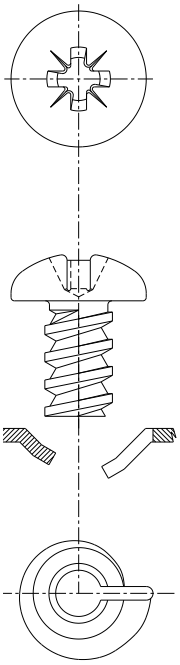

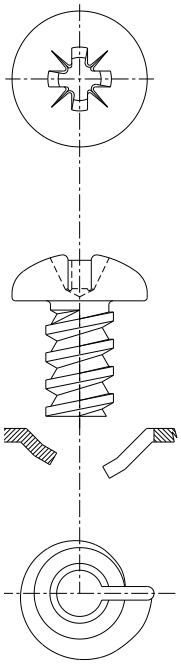

LIGHTING

PJR Engineering, Martech, Hilclare

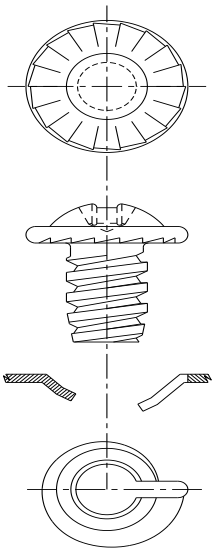

TOOL-ROOM CABINETS

Pinder Versatool

SHOP FITTINGS

PPE

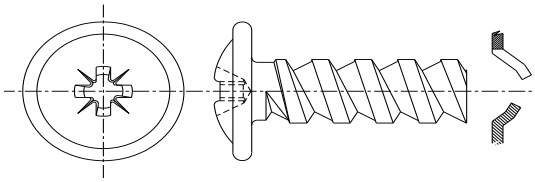

ELECTRICAL ENCLOSURES

COOPER Crouse-Hinds – STAINLESS STEEL

(Ø6 x 14 Hex-Flange for 1.2mm Material)

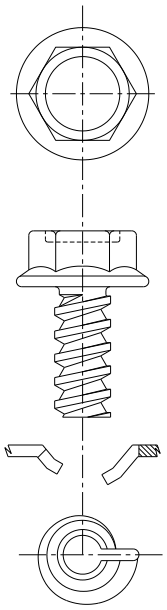

Stainless Steel enclosures designed to protect electrical systems in demanding environments.
The system assisted in obtaining IP66 certification.

Hager Group

MK Electric

Alan Electric

U Systems

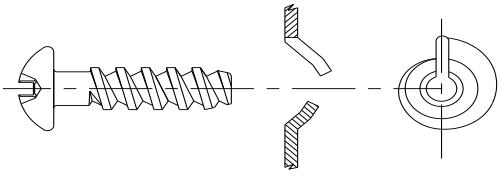

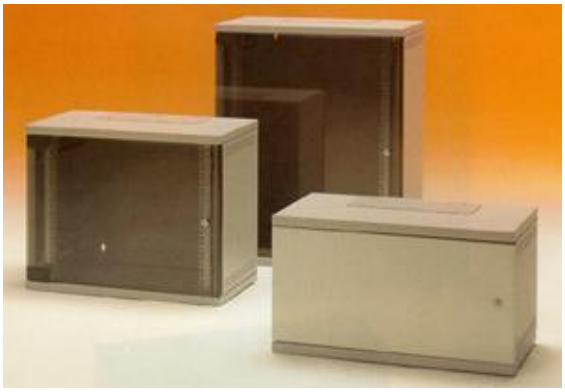

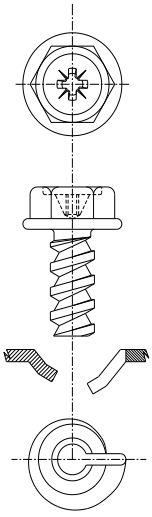

COUNTERFEIT DETECTION EQUIPMENT

(Ø4 x 10 Pozi Pan for 1.0mm Material)

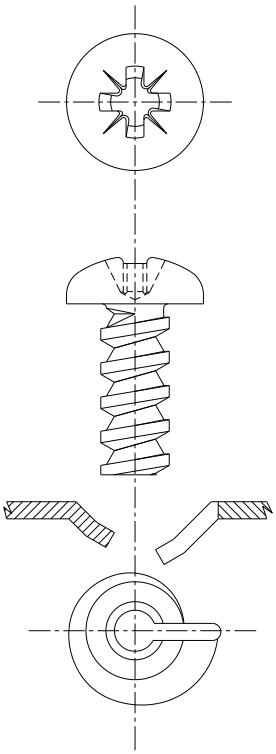

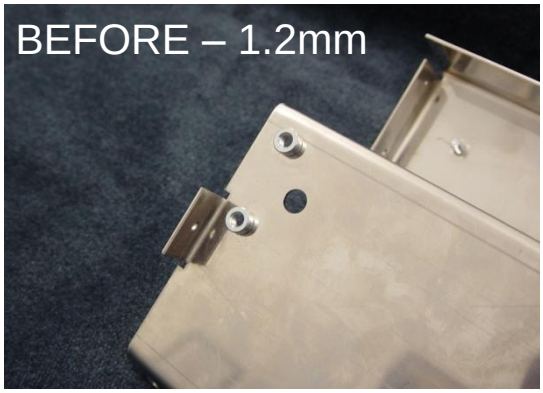

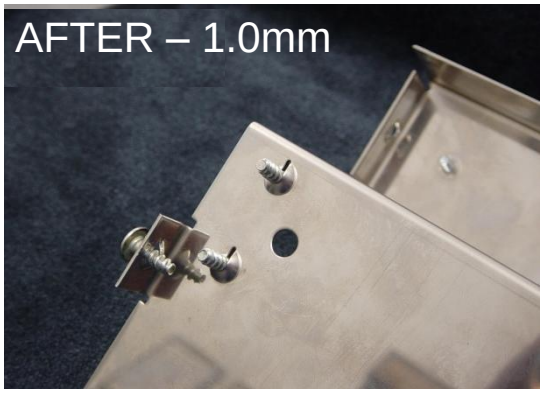

FTL

ARMOURED CABLE

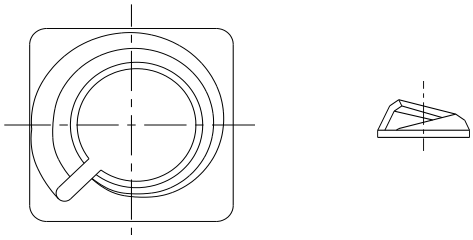

Household Articles

COFFEE POTS

(Ø3 x 17 Pozi Pan for 0.6mm Material)

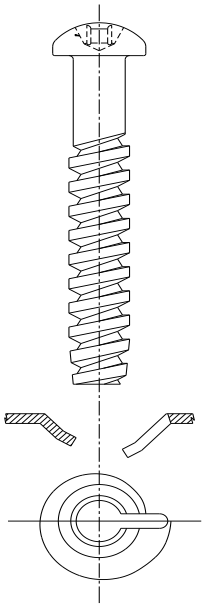

Just some of the other High Torque Applications in Production

Cable Ducting

MANSFIELD POLLARD

Racking Equipment

KLM, ACE CASE

Greenhouses

LOWFIELD

Military Design

STRONGBOX

Plastic Forming Equipment

CR CLARKE

General Sheet Metal

WESTWOOD AUTOMATION

Textile Machines

LIEBERT

High Torque Fasteners Development Projects

High Torque Engineers conducting a fastener application feasibility study on:

cooling unit for trucks

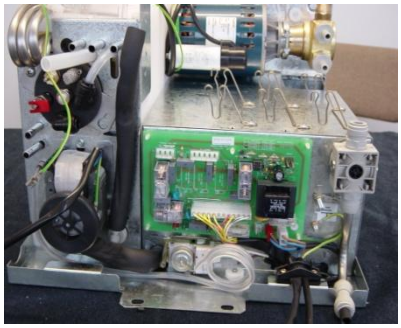

dispense unit for vending machines

household fire unit

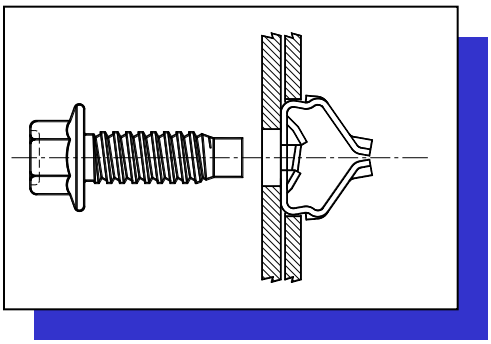

THE EXPANSION CLIP

Suitable Applications from 2-3mm panel thickness

Incorporating the High Torque Fastener Systems enhanced geometric thread design.

Extreme Strength

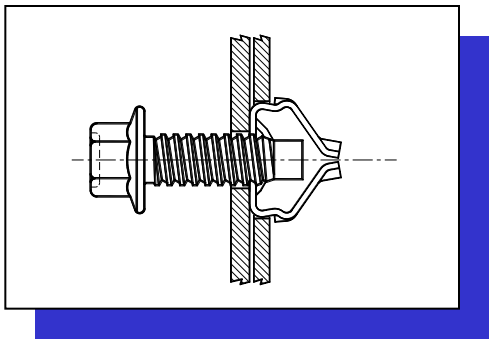

Easy Insertion

High Pull Out Load

Prevailing Torque

Vibration Resistant

No Special Insertion Equipment Required

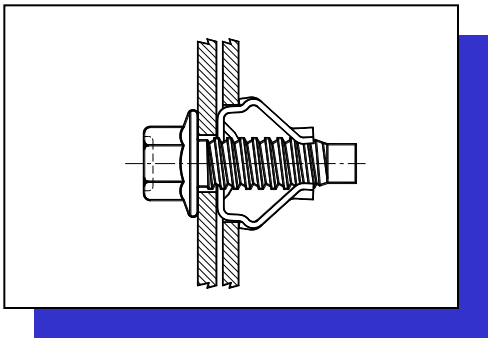

KEY ATTRIBUTES

Formed radii to assist insertion

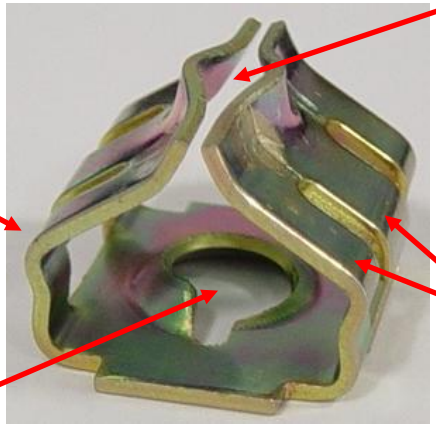

Prevailing torque feature, applies even pressure on external fastener thread

Expansion legs and formed knuckles lock into material when inserted

Ø8 High Torque Helix

High Torque Fastener Systems assisting worldwide manufacturing

America

Existing nut inserts being removed and replaced with the High Torque Fastener System.

Amana

SUBURBAN

MAYTAG

PERFORMANCE YOU CAN DEPEND ON

HAYWARD

SEHER SLIM BEKEKEN

The Netherlands

Gaalderop

GoudaHolland

Testimonials

PPE Ltd is a bespoke design and fabrication company in point of sale industry, the parent PPE Group turning over about £25M. Major customer include Tesco, Gallaher, Sainsbury, Procter and Gamble and others.

We converted to HT about 6months ago, and the results have been superb because we have managed to remove significant numbers of inserts that we traditionally would have used. We are still ramping up usage, and will continue to expand their use.

We have found the HT system to be reliable and easy to use, much better than the alternative of punching Metric thread forms into thin steel.

It is already saving the company money, through increased throughput by removal of a process bottleneck and reducing failures.

It is working well for PPE, and has fortunately been a low risk investment for the return.

Design Manager
PPE Ltd
Horsecroft Road
The Pinnacles
Harlow CM19 5BH

FASTENER ENGINEERING WITH AUTOMOTIVE IN DETROIT - CHRYSLER

"A Revolutionary Fastener System suitable for replacing a wide range of inserts. It also solves a major industry problem with thin metal attachments".
Dr Thomas S. Doppke – Senior Fastener Engineer with more than 25 years Fastener experience with Automotive in Detroit.

THE FASTENER ENGINEERING AND RESEARCH ASSOCIATION

EUROPE'S LARGEST ASSOCIATION FOR ENGINEERS INVOLVED IN THE SPECIFYING OF MECHANICAL FASTENERS AND FIXINGS

"This High Torque product emphasises the on-going innovation within the fastener community; there are always new ways to increase fastener and fixing efficiency and achieve cost savings".
John M Fletcher – General Secretary

Faculty of Applied Design & Engineering

"Swansea Metropolitan University has formed a successful collaboration with High Torque Fastener Systems. We have helped this innovative company develop its products with physical testing and finite element analysis".
Dr Kelvin Donne –Faculty Dean